Science & Education of the Bauman MSTU
Electronic journal
ISSN 1994-0408

Science and Education of the Bauman MSTU, 2015, no. 02, pp. 180–196.

DOI: **10.7463/0215.0757676**

Received: 24.02.2015

A Robotic System for Inspection and Repair of Small Diameter Pipelines

S.A. Vorotnikov[1,*], N.I. Nikitin[1], M. Ceccarelli[2]

*s_vorotnikov@mail.ru

[1]Bauman Moscow State Technical University, Moscow, Russia
[2]Laboratory of Robotics and Mechatronics, University of Cassino and South Latium, Cassino, Italy

This paper deals with the construction and control system of miniature robotic system that is designed to move and make inspection inside small diameter pipelines. It gives an overview of ways to move a microsize robotic system inside the small diameter pipe. The proposed design consists of information module and three traction modules, including modules for fixing, linear moving and angular positioning. This paper describes the design and operation of a robotic system and its different modules. Also are shown the structure of the robot control system, the basic calculations of construct and some simulation results of the individual modules of the robot.

Keywords: microsize robotic system, transport-manipulation device, tractive modules, in-pipe inspection

1. Introduction

One of the actively developing areas in Robotics is related to microsized mechatronic systems and mobile robots that are capable of moving and performing predefined functions in restricted space. A good example of such restricted space is small-diameter pipelines.

There are several different mobile diagnostic systems for movement in large-diameter pipelines (including mobile robots), whereas those for small-diameter pipelines are currently at an initial stage of development. A demand for such systems results from the necessity to increase the efficiency of technical diagnostic systems that are widely used for small-size pipelines in industry.

Good perspectives for diagnostics in small-diameter pipelines with the help of mobile robots can be recognized in industrial applications for heating, water supply, gas lines, sewer systems, in complex technical systems (nuclear and thermal power plants, chemical plants). Other promising applications can be in fields of ICT, cable laying, micro-surgery, biophysics and medicine.

Presently in-tube diagnostics is often performed by special probes with different sensors. These probes move under the pressure of a liquid or gas through a pipeline. However, these de-

vices cannot stop at predetermined locations for detailed investigations and repairs of pipelines. In contrast, a mobile robot is able to accurately set the special equipment in interesting places (welds or any defects), as well as to produce large pulling forces to move it. Mobile robot can work diagnostics by means of various devices (ultrasonic detectors and magnetic defectoscopes, camcorders, etc.). In addition, it can carry out repair individual defects pipeline with special instruments, placed on its board. In this paper a design of a miniature robot is presented with its modules for operating in small diameter pipelines.

2. Background of microsized in-pipe robotics

The principles of movement for in-pipe mechanical systems are based on robot functions, environment characteristics, operation requirements, and motion conditions. Operating environment includes air, water, viscous and combustible liquids, etc. In specific literature like in [2-7, 9, 12-13] the term «microsize» is used to refer to robots that are designed to operate in 5 to 30 mm diameter pipes. Those pipeline systems are typical in residential buildings and industrial facilities (the most common being 15, 20, and 32 mm).

Modern researches in the field of mobile and microsize robotic systems (MRS) are carried out in four main areas:

- identification of ways for motion inside tube [3-4, 6, 12-13];
- finding the appropriate design structure of MRS [5-6];
- synthesis the control systems and algorithms [8, 10-11];
- selection of a method for inspecting the internal surface of a pipeline [4, 7, 14].

Summarizing, these and other task requirements will form the basic requirements to MRS for applications with in-pipe movement. A MRS should be capable of:

- direct and reverse motion;
- motion along vertical and inclined pipe line sections;
- stopping at any trajectory point with stable positioning of a payload without slipping (mainly in vertical sections);
- motion along curved sections with curvature $R > 50 \cdot D$, where D is the pipe inner diameter;
- visual and inspection eddy-current evaluation of the inner layer, as well as acting for local repair.

Depending on the case, special requirements may make the MRS design more complicated, like for example the necessity to move through sections with curvature of $R < 10 \cdot D$, and «T»,

«L» or «X-shaped» branches. Even with capability of motion direction change. Such a microsize robot can be self-controlled or externally controlled, e.g. in case of withdrawal.

Existing microsize mobile robots can be classified based on the motion principles that are summarized in Fig. 1: passive motion by gas or fluid pressure, Fig. 1, a; wheeled motion, Fig. 1, b; track-type mobility, Fig. 1, c; pin-type motion, Fig. 1, d; walking mode, Fig. 1, e; worm-type action, Fig. 1, f; spiral movement, Fig. 1, g [6].

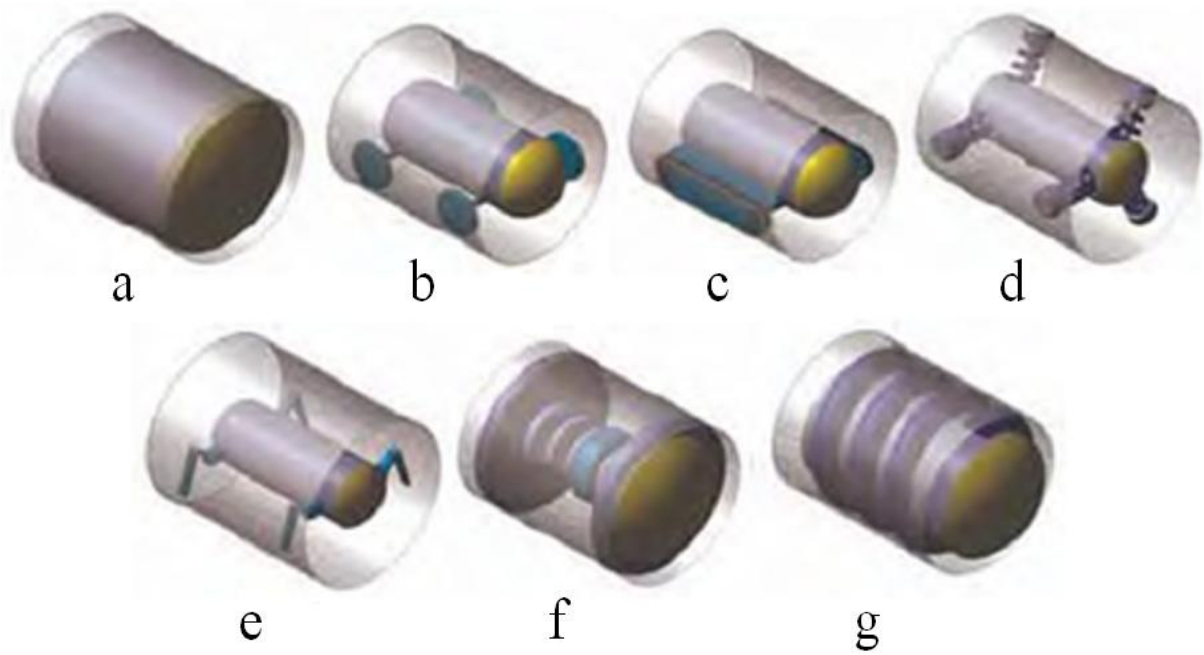

Fig. 1. Structure schemes of microsized mobile robots: a – passive motion; b – wheeled motion; c – track-type mobility; d – pin-type motion; e – walking mode; f – worm-type action; g – spiral movement

The above analysis in Fig. 1 suggests that the worm-type MRS is a suitable choice for movement in small-diameter pipes. Moreover, it allows for modular solutions where *tractive* (performing given movements), *informational* (containing electronics and diagnostics tools), and *repair* modules can be connected in a sequential order.

This paper is focused on the design and operation planning of tractive modules such as *linear displacement modules* (providing required linear dimension alteration), *fixation modules* (ensuring the retention of MRS during linear dimension alteration), *angular positioning modules* (ensuring the module rotation).

Let us consider the movement principle of MRS with the two fixation modules and one linear displacement module as shown in Fig. 2. Fixation modules have two states that are used for contacting tube surface and establishing contacts. Linear displacement module works moving

along the pipe and provides robot motion along the pipe. Phases of the modules for robot motion are shown in Fig. 2, for straight pipeline (in Fig. 2, a) and for curved pipeline (in Fig. 2, b).

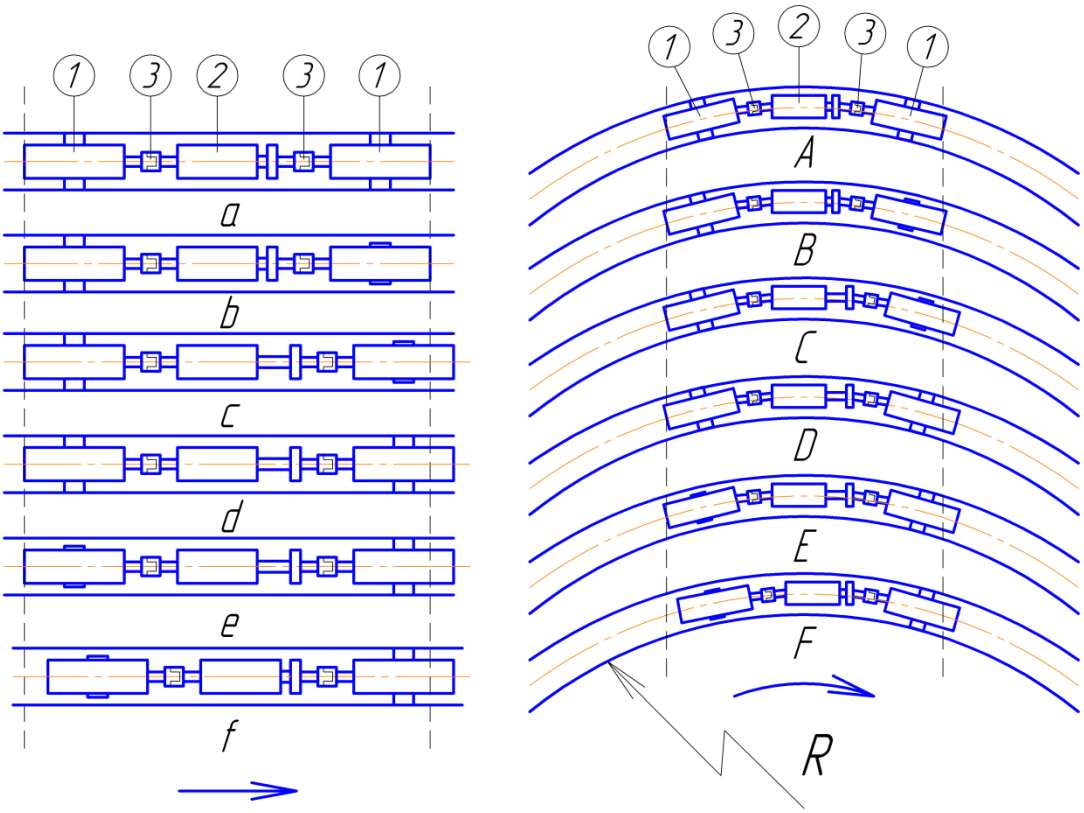

a b

Fig. 2. Phases of module actions for robot motion: a – in a straighline pipeline with a sequence from *a* to *f*; b – in a curved pipeline with a sequence from *A* to *F*. The robot modules are indicated with circle number as *1* – fixation modules, *2* – linear motion module, *3* – cardan connection

Referring to Fig. 2, a the robot starts when from both fixation modules are fixed against the pipe wall (a), after which the front fixation module shrinks (b). Then the linear displacement module stretches (c), moving the front fixation module to the right. The front fixation module acts against the pipe wall (d), and the rear fixation module shrinks (e). Then the linear displacement module shortens, i.e. moving the rear fixation module to the right (f). In the end of motion cycle, rear fixation module rests against the pipe wall (a) in the starting configuration. Thereby, the whole system has moved to the right. Movement to the left can be performed in the same way in opposite direction.

In in-pipe inspection methods and systems for different industrial facilities and residential buildings the main indicators of pipe state are considered the pipe wall thickness and tension level in specific pipe parts. Those are the main cause of pipe destruction and they are most frequently observed near pipe bends and tees (i.e. near “T-”, “L-” and “X-branch” pipe laterals). Therefore, it is crucial not only to choose the most appropriate MRS kinematic scheme but ensure

high-precision position of informational and repair modules in the pipe in order to precisely identified the location of defects.

3. MRS structure and control system

The structure of MRS for inspection and local repair of pipe inner surface is shown in fig.3.

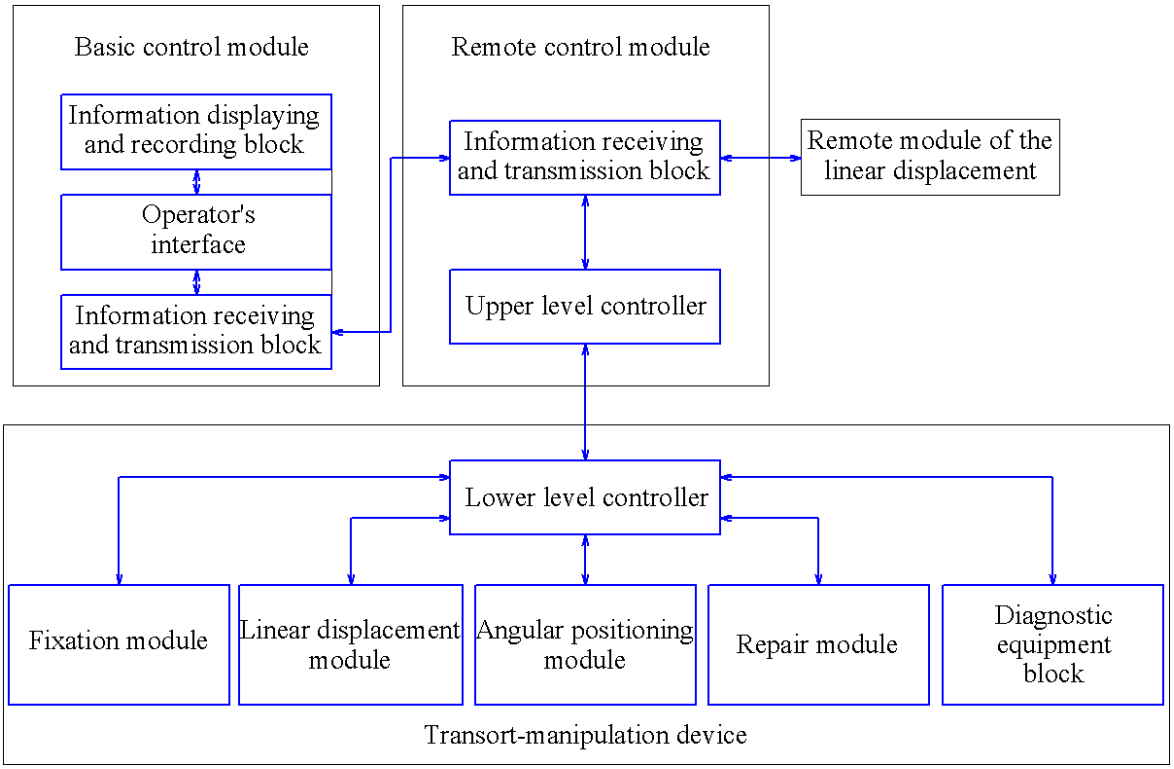

Fig. 3. System structure of the proposed MRS

The MRS control system can be divided into upper and lower levels. The upper one includes following blocks:

- basic control module that is responsible for telemetry data processing, displaying this information at operator's control panel, and transmitting control instructions from this panel to the upper level controller;
- remote control module including upper level controller; it transfers control instructions from operator to the transport-manipulation device and telemetry data from sensors to basic control module. It is responsible for logic control of MRS motion as based on fuzzy logic tools, Petri networks algorithms and finite automata theory;
- remote module of the linear displacement, that is responsible for synchronous supply of the cable and helping in the MRS movement.

The lower level of MRS control system is related to the transport-manipulation device moving inside pipes. It consist of three tractive modules (fixation, linear displacement, angular positioning) and informational module with diagnostic tools as shown in Fig. 4. Length of each module have been sized as 150 – 250 mm with diameter of 30 – 50 mm.

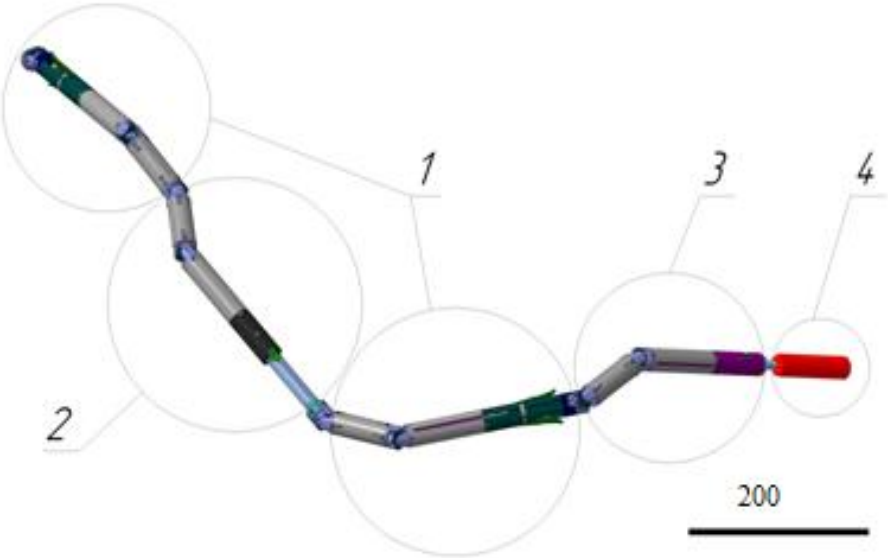

Fig. 4. Transport-manipulation device of the MRS (*1* – fixation module; *2* – linear diplacement module; *3* – angular positioning module; *4* – informational module)

Separate modules are gathered into a joint structure in a proper order through connection with cardan joints. When required, repair module is placed at the aft. Overall length of the MRS with all modules varies from 800 to 1300 mm.

4. Tractive modules design

Let's look at the designs of tractive modules, which are: fixation module, linear diplacement module, angular positioning module.

4.1. Fixation module

To ensure reliable fixation MRS inside the pipe, it is necessary to design the fixation module as in Fig. 5 to satisfy the following characteristics:

- detents of the module should ensure fixation of the entire range of operating diameters;
- length of detents should be minimized;
- load on the structural elements should not significantly exceed the load on the walls of the track.

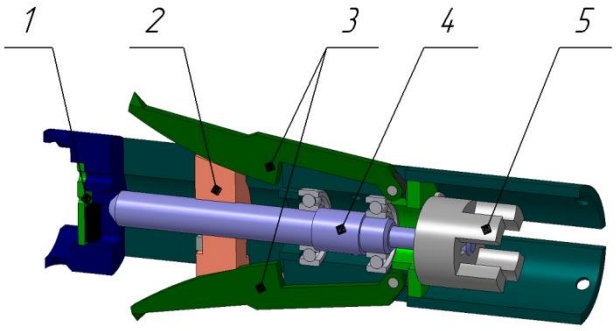

Fig. 5. The design of the fixation module. *1* - board with Hall sensor, *2* - spacer nut, *3* - detents, *4* - actuating screw, *5* - half-coupling

Considering described requirements, detents 3 in Fig. 5 can be designed with arc-shaped operating surface with the length of the detent to spacer nut *2* traverse ratio 2:1. In this case, in the pipe with maximum diameter contact between detent and spacer nut occurs near the center of detent. This ensures a uniform distribution of load on the structure and pipe wall. To determine the current position of the spacer nuts and detents, Hall sensor *1* as in Fig. *5* within the fixation module.

Transferring torque from the engine to the actuating screw *4* performed with coupling, which consists of the two half-couplings *5* with an elastomer crown.

Another one construction of fixation module Fig. 6 could be used in the case where the robot operates in pipes with larger diameter (more then 30 mm).

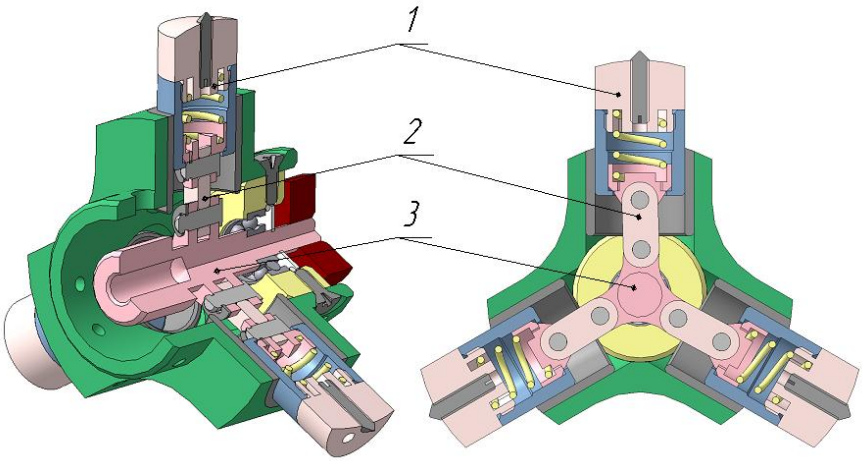

Fig. 6. The design of the fixation module. *1* – slider, *2* – rocker, *3* – toggle

This construction is more complicated but, at the same time, its more reliable, due to the fact that it used 3 pawls.

Lets consider main forces that act on this mechanism elements Fig. 7.

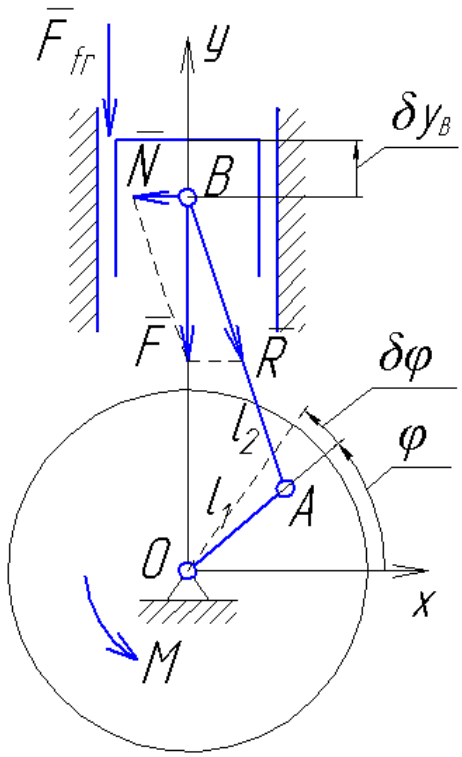

Fig. 7. Main forces that act on one pawl (slider, rocker, toggle)

$$y_B = l_1 \cdot \sin(\varphi) + \sqrt{l_2^2 - (l_1 \cdot \cos(\varphi))^2}$$

$$\delta y_B = l_1 \cdot \cos(\varphi) \cdot \delta\varphi - \frac{l_1^2 \cdot \sin(\varphi) \cdot \cos(\varphi)}{\sqrt{l_2^2 - (l_1 \cdot \cos(\varphi))^2}} \cdot \delta\varphi$$

$$\delta y_B = l_1 \cdot \cos(\varphi) \cdot (1 - \frac{l_1 \cdot \sin(\varphi)}{\sqrt{l_2^2 - (l_1 \cdot \cos(\varphi))^2}}) \cdot \delta\varphi$$

$$M \cdot \delta\varphi - F \cdot \delta y_B - F_{fr} \cdot \delta y_B = 0$$

$$M \cdot \delta\varphi = (F + \mu_1 \cdot N) \cdot \delta y_B$$

$$M \cdot \delta\varphi = F \cdot (1 + \mu_1 \cdot tg(\psi)) \cdot l_1 \cdot \cos(\varphi) \cdot (1 - \frac{l_1 \cdot \sin(\varphi)}{\sqrt{l_2^2 - (l_1 \cdot \cos(\varphi))^2}}) \cdot \delta\varphi$$

where

$$\psi = \arcsin(\frac{l_1 \cdot \cos(\varphi)}{l_2})$$

We have found relation between moment M and force F subject to angular position of toggle. Let's consider required force F (fixation force between pawl and inside pipe surfaces) as a function of pipeline inclination.

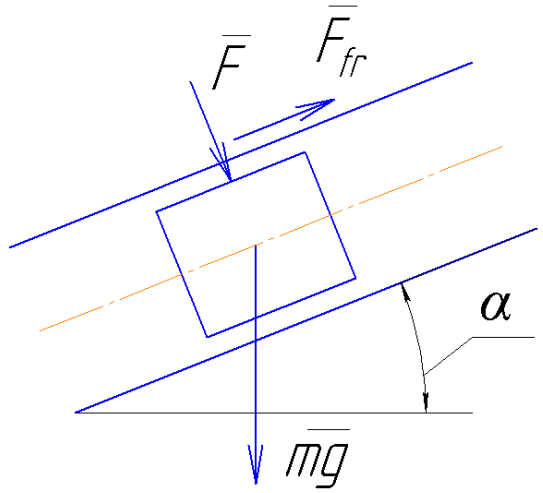

Fig. 8. Main forces that act on the robot into a pipeline section

$$m \cdot g \cdot \sin(\alpha) = 3 \cdot F_{fr}$$

$$F = \frac{m \cdot g \cdot \sin(\alpha)}{3 \cdot \mu_2}$$

Unify this equations we could find required moment M as a function of pipeline inclination. Model of this unit in MATLAB is shown in Fig. 9.

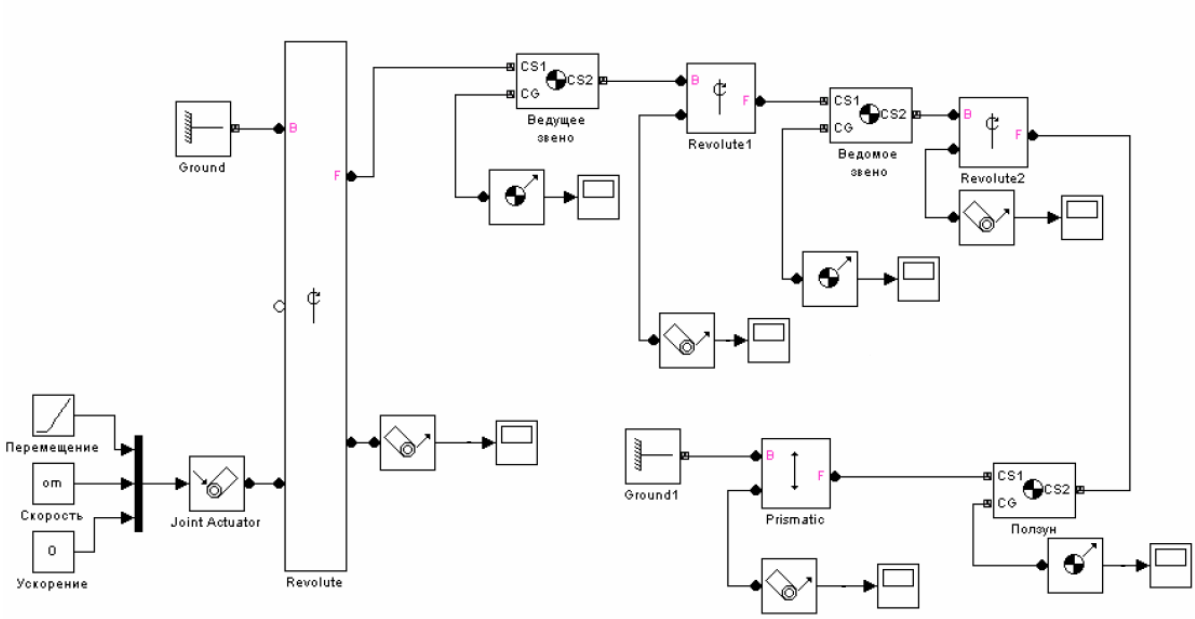

Fig. 9. Fixation module MATLAB model

As a result we have found several relationships. The most interesting are: moment distribution at the guide link, slider velocity and acceleration distribution during fixation module operation cycle.

These relations are presented on the graphs Fig. 10.

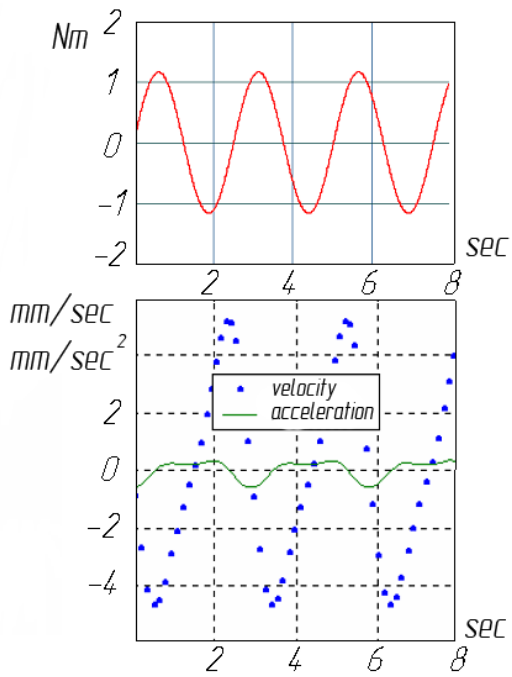

Fig. 10. Graphs of slider velocity and acceleration

4.2. Linear diplacement module

The linear extension module can be designed as in Fig. 11 as based on the kinematic pairs "screw-nut". The main requirements for this module can be outlined in the following aspects:

- a planned displacement of the movable part of the module - the spindle *2* – should be performed in a certain time;
- motion should be smooth;
- selection of the maximum longitudinal extension of the robot should be based on the geometry of the pipeline. This extension should ensure unimpeded passage of the "T" shaped turns.

Sufficient mechanical rigidity of the module at its maximum extension can be achieved with the kinematic pairs "screw - nut" inside a cylindrical shell *1*.

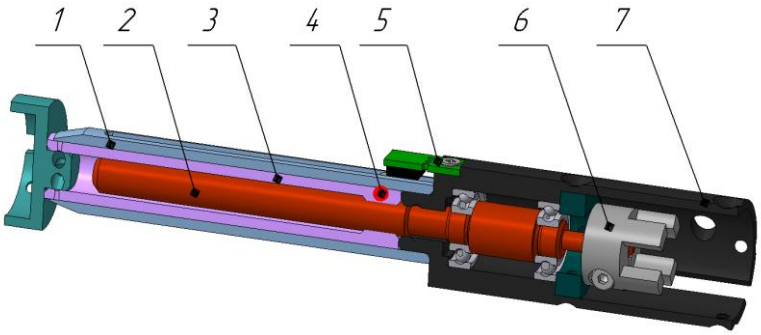

Fig. 11. Design of the linear extension module. *1* - shell, *2* - actuating screw, *3* - running nut, *4* – magnet, *5* - Hall sensor board, *6* – half-coupling, *7* - hull

The design of the extension module uses the same ideas as the fixation module design. Thus, transferring torque from the engine to the actuating screw *2* performed with coupling, which consists of the two half-couplings *6* with an elastomer crown.

Determination of the current position of the screw *2* is performed with a Hall sensor *5* mounted on the housing *7* and the magnet *4*, located on the running nut *3*.

4.3. Angular positioning module

The module is used for the rotation of the information module around longitudinal axis of the transport - manipulation device of the MRS while inspection of the internal surface of the pipe Fig. 12. While assembling this module is installed in the rear part of the robot.

The basic requirements for the angular positioning module can be considered as:

- a planned displacement of the movable part of the module should be performed in a certain time;
- movement of the movable part of the module should be smooth.

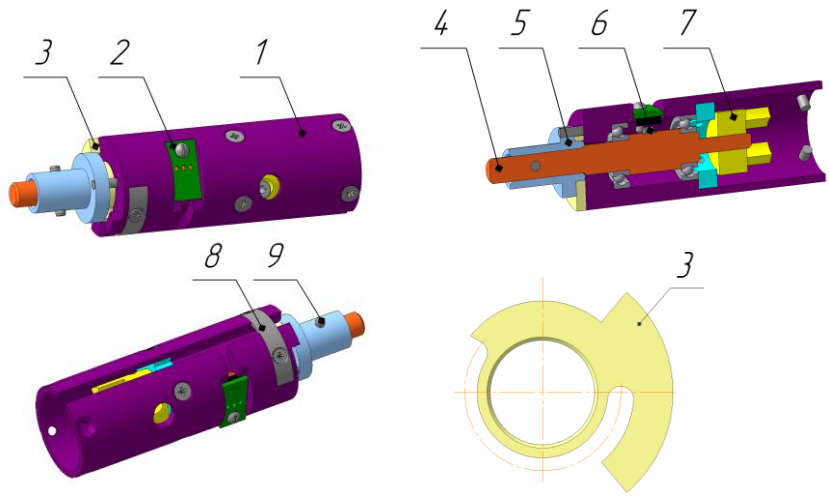

Fig. 12. The design of the angular positioning module. *1* - body, *2* - Hall sensor board, *3* - detent, *4* - shaft, *5* - shell, *6* - magnet, *7* – half-coupling, *8* - bracket, *9* - pin

Referring to Fig. 12 the body *1* is joined with the motor module, which contains geared motor. Torque is transmitted to the shaft *4* through the sleeve, which consists of two half-coupling *7*. To restrict the rotation of the shaft stop *3* is used. Shell *5* with the limiter is attached to the shaft by a pin *9*. When you rotate the shaft (and the shell with limiter) limiter enters into the inner groove of the stop and, on reaching it's end, can be freely rotated together with it until the outer ledge engages the body's *1* ledge. To control the position of the shaft *6* magnet and a board with a Hall sensor *2* are used.

Hinges, based on the principles of cardan shaft are used to assemble all modules into a single device (Fig. 13). Thanks to this design, the MRS can repeat pipeline geometry.

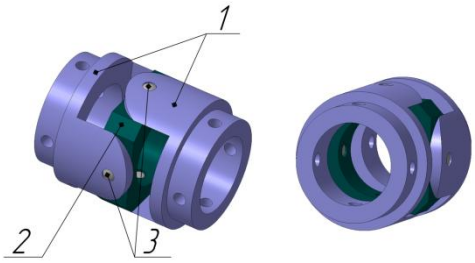

Fig. 13. Hinges design. *1* – flanges, *2* – doubletree, *3* – axles

As already mentioned, an important requirement for modules of MRS is the ability of moveable elements of these modules to move from one end to the other within a certain specified time.

Let's make a calculation of the angular velocity of the actuating screw *2* on the example of the fixation module. This angular velocity is needed to move the detents of the initial state *3* in the final *4* (Fig. *14, a)* during *t.*

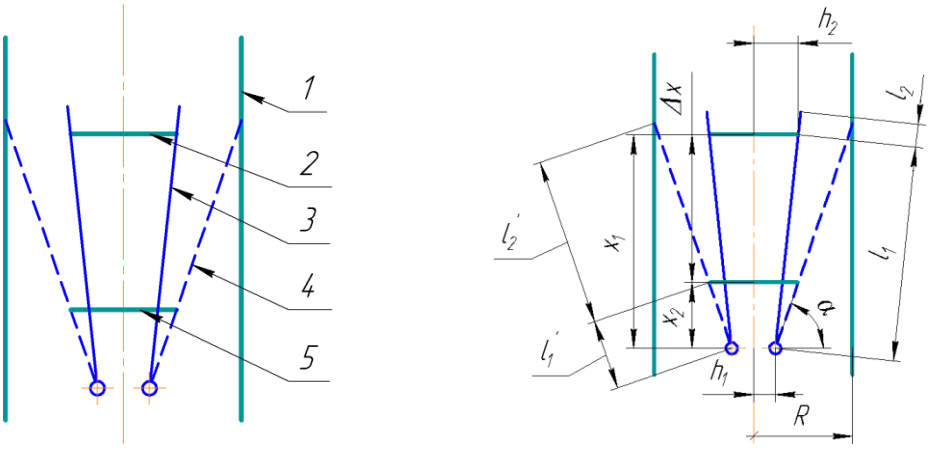

a *b*

Fig. 14. The drive of the actuating screw of fixation module. *a* – calculation of the required angular velocity of the actuating screw: *1* - a pipe wall, *2* - spacer nut (initial position), *3* - detent (the initial position), *4* - detent (end position), *5* - spacer nut (end position) *b* - basic geometrical parameters of the fixation mechanism

In the calculation following parameters are known (Fig. *14, b*): l_1, l_2, h_1, h_2, R to obtain:

$$l = l_1 + l_2 = l_1^{'} + l_2^{'}$$

The Δx - movement that nut *2* makes can be computed a

$$\Delta x = x_1 - x_2 ,$$

where $x_1 = \sqrt{l_1^2 - (h_2 - h_1)^2}$ and $x_2 = (h_2 - h_1) \cdot tg(\alpha)$.

From Fig. *14, b* it holds

$$\sin(\alpha) = \frac{R - h_1}{l_1 + l_2},$$

from which angle α can be computed

When the movement that spacer nut is known, one can find the required angular speed of the screw ω.

Assuming: P as pitch of actuating screw R_s as its radius, $\mathrm{tg}(\beta)$ as the tangent of the thread angle, $N = P \cdot \Delta x$ as the number of turns that nut will make while moving along the screw, then the following expression can be computed

$$P = 2\pi \cdot R_B \cdot tg(\beta)$$

Thus, the angular speed of the screw $\omega = \frac{N}{t}$, for t - duration of the motion can be calculated as

$$\omega = \frac{2\pi \cdot R_B \cdot tg(\beta) \cdot \Delta x}{t}$$

These equations can be used for further modeling of the system and in the construction of a control algorithm for corresponding efficient operation.

5. Conclusion

In this paper the modular design of mobile microsize robotic systems (MRS) is presented. This MRS is able to make diagnostics and local repair of small-diameter pipes inner surface in remote control mode as well as in automatic mode. The analysis of different in-pipe movement methods is discussed and the most effective MRS kinematic scheme is identified. The efficiency of this construct has been sized and verified by modeling in Solid Works.

References

1. Alonso J.L.G., Ares E.G., Torres J. Autonomous integrated system for tank and pipe inspection. *Proc. 8 ECNDT*, Barcelona. British Institute of Non-Destructive Testing, 2002.
2. Antheierens C., Betemps M. Design and control of a pneumatic microrobot for in-pipe inspection of nuclear pipes. *Journal of Micromechatronics*, 2001, vol. 1, no. 2, pp. 155-174. DOI: 10.1163/156856301753398172
3. Dovica M., Gorzas M. Mechatronics aspects of in-pipe minimachine of screw-nut principle design. In: *Recent Advances in Mechatronics*. Springer Berlin Heidelberg, 2007, pp. 335-339. DOI: 10.1007/978-3-540-73956-2_66
4. Gradetskii V.G., Knyaz'kov M.M., Kravchuk L.N., Semenov E.A. Methods of the Motion for the Miniature Inside-Tube Control Robots. *Nano- i mikrosistemnaya tekhnika = Journal of Nano and Microsystem Technique*, 2005, no. 9, pp. 37-45. (in Russian).
5. Gradetskii V.G., Bolotnik N.N., Chashchukhin V.G. Modern trends of miniaturization of robotic systems. *Simpozium po robototekhnike i mekhatronike: sb. dokl.* [Proc. of Symposium on Robotics and Mechatronics]. Moscow, Keldysh RAS RVC “Expodesign” Publ., 2008, pp. 1-8. (in Russian).

6. Gambao E., Hernando M., Brunete A. Multiconfigurable Inspection Robots for Low Diameter Canalizations. *Proc. of the 22nd International Symposium on Automation and Robotics in Construction (ISARC 2005)*, Ferrara, Italy, 11-14 September, 2005. Available at: http://www.iaarc.org/publications/proceedings_of_the_22nd_isarc/multiconfigurable_inspection_robots_for_low_diameter_canalizations.html , accessed 30.01.2015.
7. Hayashi T., Iwatsuki N., Iwashina S. The running characteristics of a screw-principle microrobot in a small bent pipe. *Proc. of the 6 International Symposium on Micro Machine and Human Science (MHS '95)*. IEEE, 1995, pp. 225-228. DOI: 10.1109/MHS.1995.494242
8. Hollinger G.A., Gwaltney D.A. Evolutionary Design of Fault – Tolerant Analog Control for a Piezoelectric Pipe – Crawling Inspection Robot. *Proc. 8th Annual Conf. on Genetic and Evolutionary Computation*, 2006, pp. 761-768. DOI: 10.1145/1143997.1144133
9. Komori M., Suyama K. Inspection robots for gas pipelines of Tokyo gas. *Advanced Robotics*, 2001, vol. 15, no. 3, pp. 365-370. DOI: 10.1163/156855301300235922
10. Muscato G. Fuzzy control of an underactuated robot with a fuzzy microcontroller. *Microprocessors and Microsystems*, 1999, vol. 23, no. 6, pp. 385-391. DOI: 10.1016/S0141-9331(99)00045-9
11. Ottaviano E., Ceccarelli M., Vorotnikov S., Kurenev P. Design improvements and control of a hybrid walking robot. *Robotics and Autonomous Systems*, 2011, vol. 59, no. 2, pp. 128-141. DOI: 10.1016/j.robot.2010.10.002
12. Rizzoto G., Velkenko M., Amato P., Gradetsky V., Babkirov S., Knyazkov M., Solovtov V. In-Pipe Microrobot with Inertial Mood of Motion. In: *Climbing and Walking Robots*. Springer Berlin Heidelberg, 2005, pp. 155-174. DOI: 10.1007/3-540-29461-9_102
13. Sun L., Lu L., Qin X., Gong Z. Micro robot for detecting wall cracks of pipe. *Proc. 6th Intern. Conf. CLAWAR 2003*. Catania, 2003, pp. 643-650.
14. Arbuzov E.V., Petrenko E.O. Definition of similarity criteria and construction of electromagnetic field of eddy current probes. *Izvestiia vysshikh uchebnykh zavedenii. Mashinostroenie = Proceedings of Higher Educational Institutions. Machine Building*, 2012, no. 13, pp. 30-36. (in Russian).

Наука и Образование
МГТУ им. Н.Э. Баумана
Сетевое научное издание
ISSN 1994-0408

Наука и Образование. МГТУ им. Н.Э. Баумана. Электрон. журн. 2015. № 02. С. 180–196.

DOI: **10.7463/0215.0757676**

Представлена в редакцию: 24.02.2015

УДК 004.896:621.865

Робототехническая система контроля и ремонта труб малого диаметра

Воротников С. А.[1,*], Никитин Н. И.[1], Чекарелли М.[2]

*s_vorotnikov@mail.ru

[1]МГТУ им. Н.Э. Баумана, Москва, Россия
[2]Laboratory of Robotics and Mechatronics, University of Cassino and South Latium, Cassino, Italy

Ключевые слова: микроробот, внутритрубная инспекция, транспортно-манипуляционное устройство, тяговые модули

Одним из трендов робототехнических разработок является создание миниатюрных робототехнических систем (МРС), предназначенных для выполнения задач в ограниченных пространствах. Примером такого пространства являются трубопроводы малого диаметра: от нескольких миллиметров до нескольких сантиметров, используемые в сфере коммунального хозяйства, на предприятиях химической промышленности, в магистральных линиях систем жизнеобеспечения судов и др.

В статье предложен вариант построения МРС контроля и ремонта внутренних поверхностей произвольно ориентированных труб диаметром 50 мм. Проведенный анализ показал, что в условиях поставленной задачи оптимальной конструкцией МРС является модульная конструкция, а оптимальным способом перемещения МРС внутри трубопровода – червячный.

Система управления МРС должна содержать 3 основных модуля. Первый – базовый модуль связан с оператором МРС. Он формирует команды управления, а также реализует прием, обработку и хранение информации, поступающей с датчиков и дефектоскопов транспортно-манипуляционного устройства. Второй – выносной модуль предназначен для ретрансляции команд управления между оператором и исполнительным устройством, обеспечения синхронной подачи кабеля, а также подачи ремонтного раствора. Третий модуль – транспортно-манипуляционное устройство осуществляет непосредственно перемещение, диагностику и локальный ремонт трубопровода с помощью специализированного оборудования.

Проведенный анализ показал, что транспортно-манипуляционное устройство необходимо строить в виде совокупности трех тяговых модулей: модуля фиксации (обеспечивает надежное закрепление робота в трубе), модуля линейного удлинения

(обеспечивает своевременное увеличение линейного размера робота) и модуля поворота (обеспечивает возможность поворота диагностического и ремонтного оборудования вдоль оси робота). Разработаны конструктивные схемы всех тяговых модулей, а также выполнен кинематический и силовой расчет модуля фиксации и проведено его моделирование в пакете MATLAB.

Список литературы

1. Alonso J.L.G., Ares E.G., Torres J. Autonomous integrated system for tank and pipe inspection // Proc. 8 ECNDT, Barcelona. British Institute of Non-Destructive Testing, 2002.
2. Antheierens C., Betemps M. Design and control of a pneumatic microrobot for in-pipe inspection of nuclear pipes // Journal of Micromechatronics. 2001. Vol. 1, no. 2. P. 155-174. DOI: 10.1163/156856301753398172
3. Dovica M., Gorzas M. Mechatronics aspects of in-pipe minimachine of screw-nut principle design // In: Recent Advances in Mechatronics. Springer Berlin Heidelberg, 2007. P. 335-339. DOI: 10.1007/978-3-540-73956-2_66
4. Градецкий В.Г., Князьков М.М., Кравчук Л.Н., Семенов Е.А. Методы движения миниатюрных управляемых роботов // Нано- и микросистемная техника. 2005. № 9. С. 37-45.
5. Градецкий В.Г., Болотник Н.Н., Чащухин В.Г. Современные тенденции миниатюризации робототехнических систем // Симпозиум по робототехнике и мехатронике: сб. докл. М.: ИПМ РАН; РВК «Эксподизайн», 2008. С. 1-8.
6. Gambao E., Hernando M., Brunete A. Multiconfigurable Inspection Robots for Low Diameter Canalizations // Proc. of the 22nd International Symposium on Automation and Robotics in Construction (ISARC 2005) (Ferrara, Italy, 11-14 September 2005). Available at: http://www.iaarc.org/publications/proceedings_of_the_22nd_isarc/multiconfigurable_inspection_robots_for_low_diameter_canalizations.html , accessed 30.01.2015.
7. Hayashi T., Iwatsuki N., Iwashina S. The running characteristics of a screw-principle microrobot in a small bent pipe // Proc. of the 6 International Symposium on Micro Machine and Human Science (MHS '95). IEEE, 1995. P. 225-228. DOI: 10.1109/MHS.1995.494242
8. Hollinger G.A., Gwaltney D.A. Evolutionary Design of Fault – Tolerant Analog Control for a Piezoelectric Pipe – Crawling Inspection Robot // Proc. 8th Annual Conf. on Genetic and Evolutionary Computation. 2006. P. 761-768. DOI: 10.1145/1143997.1144133
9. Komori M., Suyama K. Inspection robots for gas pipelines of Tokyo gas // Advanced Robotics. 2001. Vol. 15, no. 3. P. 365-370. DOI: 10.1163/156855301300235922
10. Muscato G. Fuzzy control of an underactuated robot with a fuzzy microcontroller // Microprocessors and Microsystems. 1999. Vol. 23, no. 6. P. 385-391. DOI: 10.1016/S0141-9331(99)00045-9

11. Ottaviano E., Ceccarelli M., Vorotnikov S., Kurenev P. Design improvements and control of a hybrid walking robot // Robotics and Autonomous Systems. 2011. Vol. 59, no. 2. P. 128-141. DOI: 10.1016/j.robot.2010.10.002
12. Rizzoto G., Velkenko M., Amato P., Gradetsky V., Babkirov S., Knyazkov M., Solovtov V. In-Pipe Microrobot with Inertial Mood of Motion // In: Climbing and Walking Robots. Springer Berlin Heidelberg, 2005. P. 155-174. DOI: 10.1007/3-540-29461-9_102
13. Sun L., Lu L., Qin X., Gong Z. Micro robot for detecting wall cracks of pipe // Proc. 6th Intern. Conf. CLAWAR 2003. Catania, 2003. P. 643-650.
14. Арбузов Е.В., Петренко Е.О. Определение критериев подобия и построение электромагнитного поля вихретоковых преобразователей // Известия высших учебных заведений. Машиностроение. 2012. № 13: 25 лет НУК РК. С. 30-36.